HOUSING SPECIFICATION DRAWING

UNCONTROLLED COPY

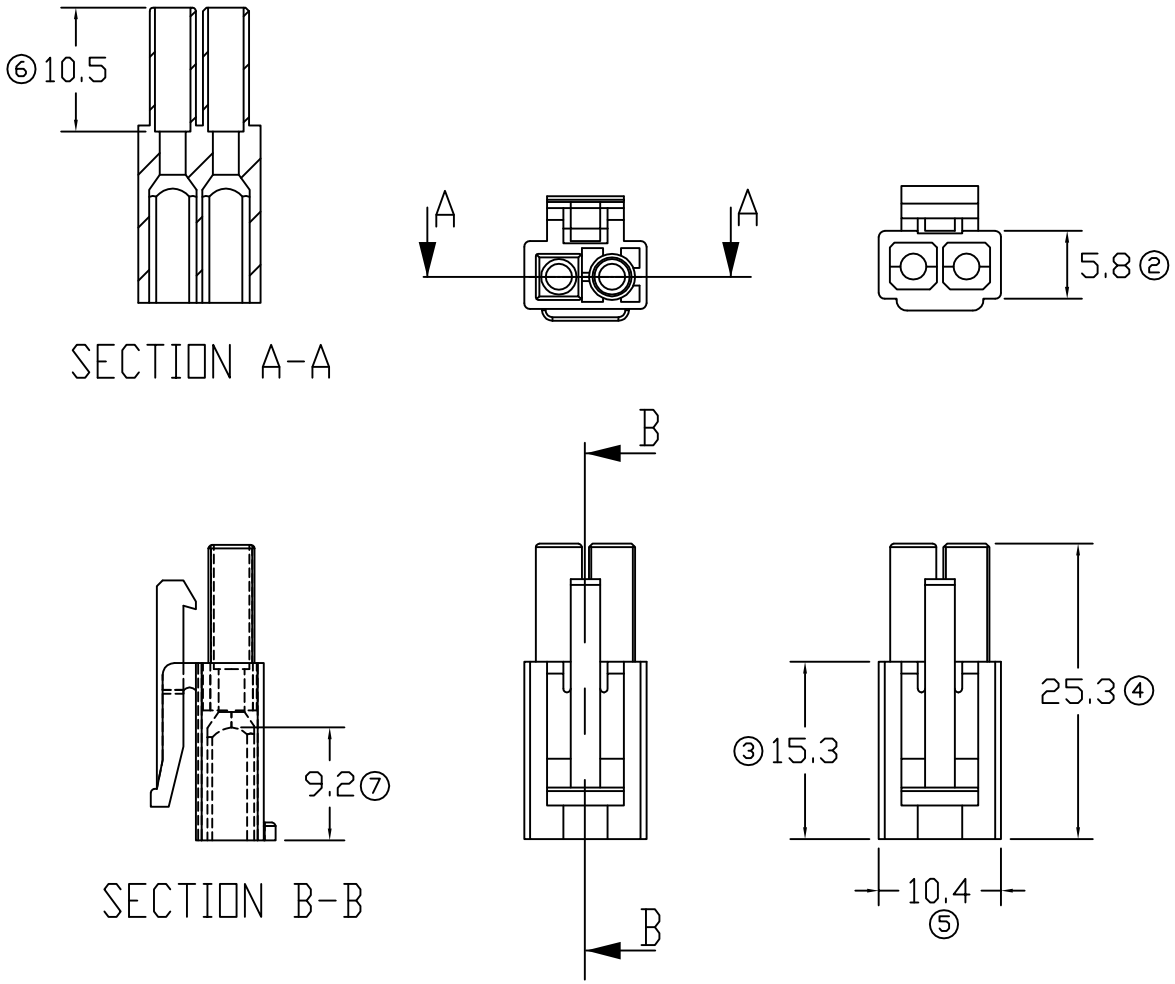

WHITE	NYLON66(V0)	ELP2
COLOR	MATERIAL	PART NUMBER

1) PACKING QTY: 1000 PCS/BAG

SPECIFICATION :

FOR REFERENCE ONLY

REVISION NO	REVISION DATE	REASON OF CHANGE
00	9/8/07	1ST ISSUE

REVISION: 00

SHEET OF : 1 / 1

DIMENSIONS : MM

TOLERANCE UNLESS OTHERWISE SPECIFIED:

X.XXX +/−0.05
X.XX +/−0.10
X.X +/−0.20
X +/−0.50

EFFECTIVE DATE : 9/8/07

DWN: KS YEW
CHK: SC CHOO
APVD: Y.L CHUANG
SCALE : FREE
DRAWING NO: A1498

EPi Terminals & Connectors
Elamp Precision Industry(M) Sdn.Bhd.

PART NAME:
JT-EL TYPE HOUSING

APPLICABLE (1) TERMINALS (2) HOUSING
(1) 28013
(2) ELR2