HOUSING SPECIFICATION DRAWING

UNCONTROLLED COPY

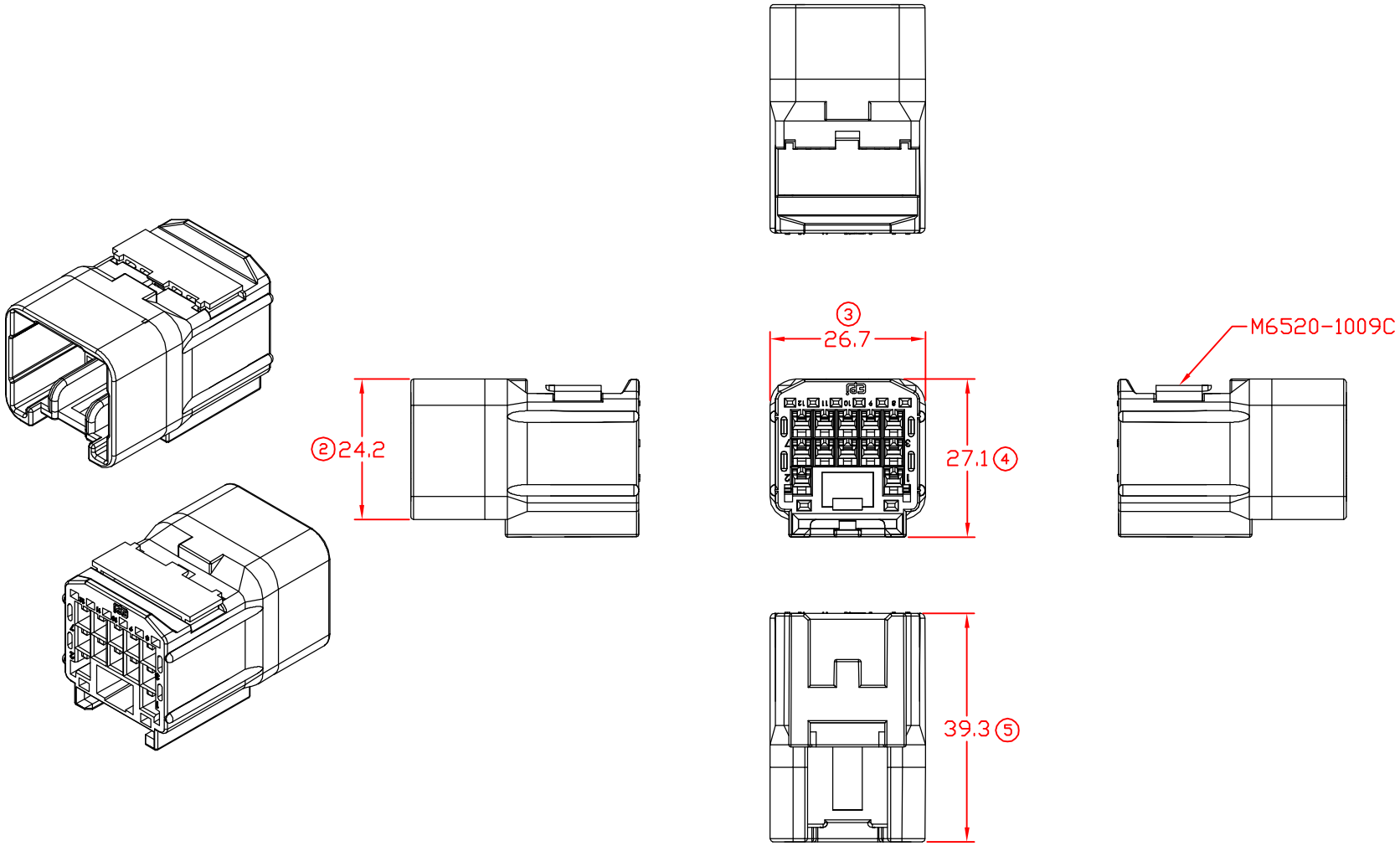

–	–	–
NATURAL	PBT	M6520-1009A
COLOR	MATERIAL	PART NUMBER

1) PACKING QTY: 50 PCS/BAG

SPECIFICATION :

FOR REFERENCE ONLY

REV.	DATE	AMENDMENT
00	16/3/11	NEW RELEASE

REVISION: 00

SHEET OF : 1 / 1

DIMENSIONS : MM

TOLERANCE UNLESS OTHERWISE SPECIFIED:

X.XXX +/−0.05
X.XX +/−0.10
X.X +/−0.20
X +/−0.50

EFFECTIVE DATE : 16/3/11

PREPARE BY: KS YEW

REVIEWED BY: KP YEOH

APPROVED BY: CY CHUANG

SCALE : FREE

DRAWING NO: A1588

EPi Terminals & Connectors
Elamp Precision Industry(M) Sdn.Bhd.

PART NAME:
090 SERIES HOUSING

APPLICABLE (1) TERMINALS (2) HOUSING

(1) 27096

(2) M6520-1004